SPACECOM CCTV LENSES

EHF16M

【SPECIFICATIONS】 3Megapixel-Lens

Image Size : 1/1.8

Focal Length :	16mm	Optical Back Focal Distance :	11.35mm (In Air)
Maximum Relative Aperture :	1:1.4	Flange Back :	17.526mm
Iris :	F1.4～16	Operation :	Focus : Manual Iris : Manual
Angle of View :	24.0×18.0 deg	Operating Temprature :	-10～+50℃
Image Size :	7.04×5.28mm (φ8.8mm)	Mount :	C-Mount
Minimum Object Distance :	0.3mm (From Front Vertex)	Filter Size :	25.5mm P0.5
Resolution :	3.6μm (at center) 5μm (at corner)	Size :	φ29×31.5mm
Distorsion :	+0.06%	Weight :	Approx. 45g

【COMPOSITION】

Lens • • • • • • • • • • • • • 1
Lens Cap • • • • • • • • • • 1
Dust Cap • • • • • • • • • • 1

【DIMENSIONS】

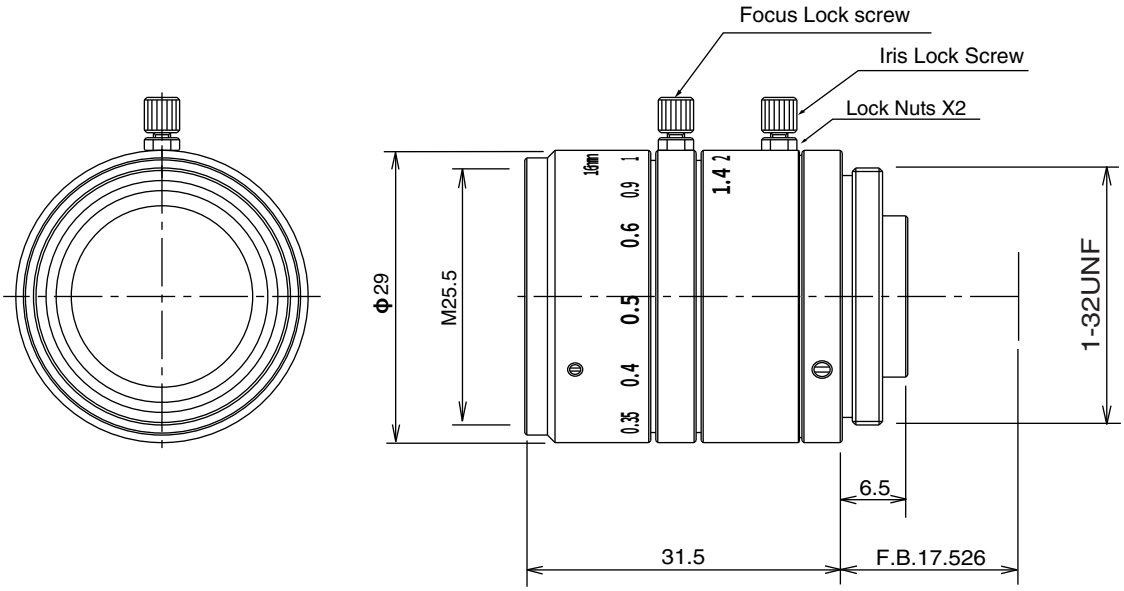

Unit:mm

SUBJECT TO CHANGE WITHOUT NOTICE.