SPECIFICATION

MODEL : VIR37618M-F2.5 (3Mega)

1. Sensing Area : 1/2.7" CMOS (OV2715), 1/3" CCD, 1/4" CCD
2. Focal Length : 3.73mm
3. Back Focal Length : 6.45mm
4. Useful Wavelength Range : VIS & NIR (850nm±30nm)
5. F NO. : 2.5
6. Iris : Fixed
7. Optical Distortion : 1/2.7" −47.7% , 1/3" −38.4% , 1/4" −18.6%
8. Angle of View(Under Scan) : (1/2.7" CMOS) 118.9°(D), 97.8°(H), 51.0°(V)
   (1/3" CCD) 106.4°(D), 80.2°(H), 58.6°(V)
   (1/4" CCD) 73.8°(D), 57.8°(H), 42.7°(V)
9. Focus Extent : 40cm − ∞
10. Lens Construction : 5 Components 6 Elements
11. Weight : 5.0g

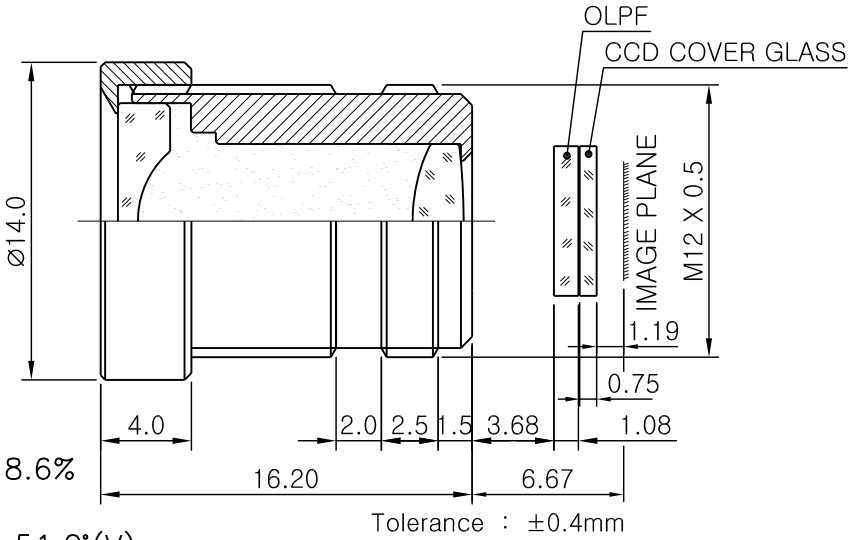

DAIWON OPTICAL CO., LTD.