SPECIFICATION

MODEL : DW 62428CM

1. Sensing Area : 1/3" CMOS/CCD
2. Focal Length : 6.2mm
3. Back Focal Length : 4.08mm
4. F NO. : 2.8
5. Iris : Fixed
6. Optical Distortion : −1.2%
7. Angle Of View : 56°
8. Focus Extent : 20cm − ∞
9. Lens Construction : 4 Components 4 Elements , (Contained 1 IR Cut Filter)
10. Weight : 3.0g

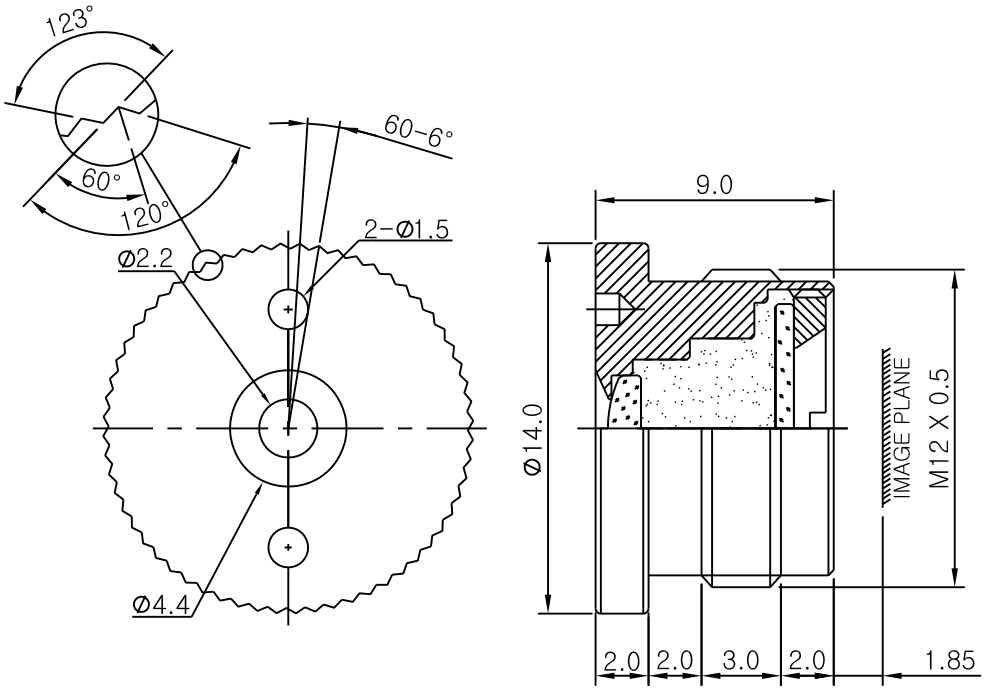

Tolerance : ±0.4mm
Angle Tolerance : ±1°

DAIWON OPTICAL CO., LTD.